SlimPak Pro

Project Information	
Job Name	
Fixture Type	60 Watt LED Die Cast SlimPak
Catalog Number	WSPL60LED
Approved by	

WSPL60LED 60 Watt LED SlimPak

SPECIFICATIONS:

Lumens: 6635
Watts: 59.95
Lumens/Watt: 110.68
CRI: 75
CCT: 4598
Lifespan: 200,000+ hrs.[1]

Construction:
Designed for commercial and industrial applications, providing cooler operating temperatures, brighter light and longer LED life. Apertures for field or factory installed photocontrol. Hinged at bottom to prevent leakage.

Installation:
Labor saving features including bubble level and removable hinged face frame.

Zero Glare:
The fixture design directs more light down and forward without wasting lumens and offensive light.

Thermal Management:
Atlas SlimPak Pro fixtures are designed as a complete system to optimize LED life and light output. The Patent Pending thermal stacking heat removal technology extracts heat from within the housing moving it away from LEDs and components. The lower temperatures result in long LED life (200,000+ hrs) and component life and also allows for higher light output.

Listings:
Luminaire is certified to cUL and CSA Standards for Wet Locations
Lighting Facts Certified
DesignLights Consortium Premium qualified luminaire, eligible for rebates from DLC member utilities. DLC Product ID: PUX6TFU8

AC Input:
120/208/240/277 V

Driver:
Constant current, Non-Class 2, 120-277 VAC, 50-60 Hz
High Efficiency – min. 88%
Off-State Power: 0 Watts
0-10 V Dimming

LEDs:
4500K CCT

Testing:
Atlas LED luminaires have been tested by an independent laboratory in accordance with IESNA LM-79 & LM-80, and have received the Department of Energy "Lighting Facts" label.

Warranty: Five-year limited warranty

Photo Control:
For factory installed 120V button photo control add suffix PC to part number. Atlas uses only premium LED compatible photocontrols.

Alpha Series LED
PROFESSIONAL GRADE

Patent Pending

DIMENSIONS:

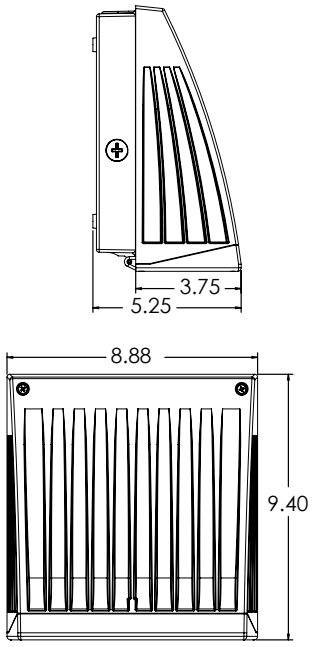

[1]*LED Life Span Based Upon LM-80 Test Results*

Rebates and Incentives are available in many areas.
Contact an Atlas Representative for more information.

ATLAS LIGHTING PRODUCTS, INC.
PO BOX 2348 | BURLINGTON, NC 27216
800-849-8485 | FAX: 336-227-0110 | www.atlasled.com

*The majority of Atlas Lighting Products are assembled in USA facilities by an American Workforce utilizing both Domestic and Foreign components. Meets Buy American requirements within the ARRA.

SlimPak Pro

WSPL60LED 60 Watt LED SlimPak

PHOTOMETRIC

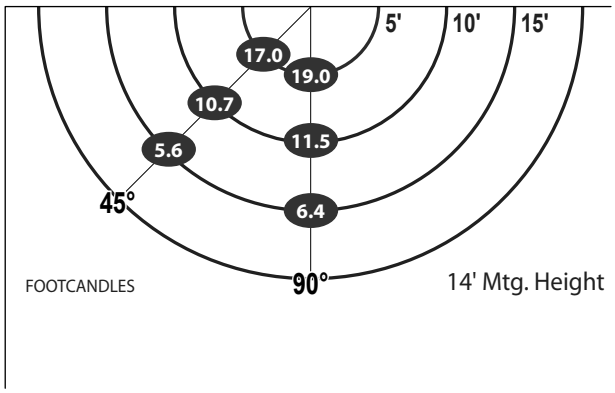

Atlas Lighting Products, Inc.

LED lighting facts®

A Program of the U.S. DOE

Light Output (Lumens)	6635
Watts	59.95
Lumens per Watt (Efficacy)	110.68
Color Accuracy Color Rendering Index (CRI)	75

Light Color Correlated Color Temperature (CCT) **4598 (Daylight)**

Warm White | Bright White | Daylight

2700K 3000K 4500K 6500K

All results are according to IESNA LM-79-2008: *Approved Method for the Electrical and Photometric Testing of Solid-State Lighting.* The U.S. Department of Energy (DOE) verifies product test data and results.

Visit www.lightingfacts.com for the *Label Reference Guide.*

Registration Number: PRB4-TTPIND (7/28/2016)

Model Number: WSPL60LED

Type: Luminaire - Area/Roadway

ATLAS LIGHTING PRODUCTS, INC.

PO BOX 2348 | BURLINGTON, NC 27216

800-849-8485 | FAX: 336-227-0110 | www.atlasled.com

The majority of Atlas Lighting Products are assembled in USA facilities by an American Workforce utilizing both Domestic and Foreign components. Meets Buy American requirements within the ARRA.